SF_6 GAS MONITORING

High & Medium Voltage

- Gas density monitor
- Hybrid gas density monitor
- Gas density sensor

trafag
sensors controls

Trafag – Swiss solutions for maximum accuracy

The Swiss-based Trafag stands for precise, reliable and maintenance-free instruments developed for the monitoring of SF_6 and other gases in the field of high- and medium-voltage switchgear. Trafag guarantees outstanding accuracy and operation in the widest temperature range on the market.

Superior SF_6 gas density monitoring for maximum safety

Sulphur hexafluoride (SF_6) is used in gas insulated switchgear because of its outstanding insulation and spark extinguishing (arc-quenching) properties. It thus makes it possible to set-up complex and safe power distribution systems even in large cities. The insulation strength depends basically on the gas density.
The safety of the facility is guaranteed when the correct level of gas density is maintained within the enclosed systems. The tightness of the installation has to be checked and controlled constantly as a leakage would result in a decrease in the insulation properties. Because SF_6 is a strong greenhouse gas, strict regulations regarding the SF_6 consumption have to be met by the switchgear operators in an increasing number of countries. These regulations stipulate a permanent monitoring of gas leakage which is done with gas density monitors or gas sensors.

Gas density is often indirectly determined by the gas pressure using manometers or pressure sensors. As the pressure in the hermetically closed volume varies enormously with temperature, such devices need temperature compensation, which are a source of errors. Trafag gas monitoring devices measure the gas density directly with the unique gas density reference principle or the patented quartz tuning fork technology. They thus offer the most reliable solution on the market by directly measuring the SF_6 gas density.

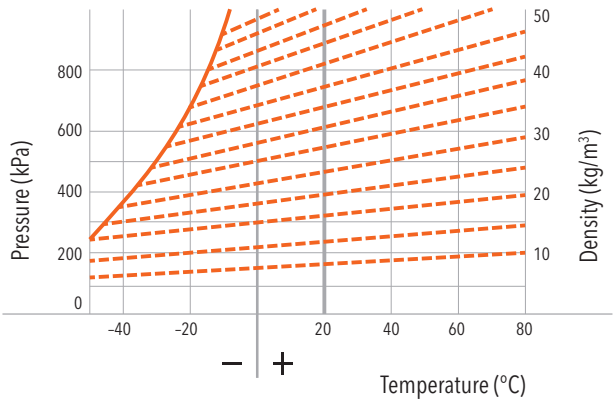

Lines representing constant SF_6 gas density (isochores): Changes in pressure and temperature with constant volume.

Trafag's gas density monitoring devices

Trafag's product range of gas density measuring devices splits into three different product groups: The mechanically working Gas Density Monitor, the electronic Gas Density Sensor and the Hybrid Gas Density Monitor, monitoring both mechanically and electronically.

Trafag Gas Density Monitor

Unique SF6 monitoring with reference gas comparison

The Gas Density Monitor functions on the principle of reference gas comparison and therefore no temperature compensation is necessary. It works electromechanically and is thus independent of electrical energy supply. Since no recalibration of switchpoints is needed, it operates maintenance-free. The operating temperature ranges are from –60 °C up to +80 °C.

Trafag Gas Density Sensor

Electronic SF6 gas density monitoring with patented quarz tuning fork

The Gas Density Sensor uses a quarz tuning fork to sense gas density directly – a unique technology patented by Trafag. With the delivery of continuous output signals (analogue or digital) from this electronically operating sensor, Trafag opens new paths for the energy distribution industry. Comprehensive SF_6 gas monitoring or SF_6 gas trend analysis of switchgear components is implemented easily.

Trafag Hybrid Gas Density Monitor

Unique SF6 monitoring: Combined mechanical AND electronic monitoring

The Hybrid Gas Density Monitor combines the advantages of both the mechnical gas density monitor and the electronic gas density sensor in a compact all-in-one apparatus: With its analogue output it is the ideal gas density monitor for SF_6 gas management trending systems but it also has a local gas pressure indication and alarm contacts.

trafag
sensors controls

Trafag Gas Density Monitor 87X6

Unique SF_6 monitoring with reference gas comparison

The mechanical, self-acting device is based on the superior reference gas principle which does not need temperature compensation. It therefore not only covers all standard applications but also maintains highest accuracy over a very wide temperature range. It allows use of different gas mixtures or the application in montane altitudes or arctic temperatures down to minus 60 °C. It is equipped with high-performance micro switches and does not need any electrical energy supply. This precise and maintenance-free device is suited to demanding applications and is reliable over decades.

Advantages

- No temperature compensation required due to superior reference chamber principle
- High resistance against vibration and shock
- No bouncing of electrical contacts
- Galvanically separated circuits
- No false alarms at low temperatures
- Maintenance-free, no recalibration of switchpoints
- Monitoring of other gases (e.g. CF_4) possible

Operating principle of the reference chamber

The gas density of SF_6 compartments is compared via a bellows system with the gas density in a reference gas chamber in the monitor. If the density of the gas alters, the bellows system actuates one or more micro switches. If the gas temperature and therefore its pressure changes, the same pressure difference occurs also in the reference chamber. No false alarm is triggered due to temperature-induced pressure changes. Up to four galvanically isolated micro switches actuate different alarm signals. An optional SF_6 indicator provides visual inspection of the SF_6 gas density as gas pressure at 20°C.

1. SF_6 tank side
2. metal bellow
3. reference gas
4. switching rod
5. micro switch
6. display

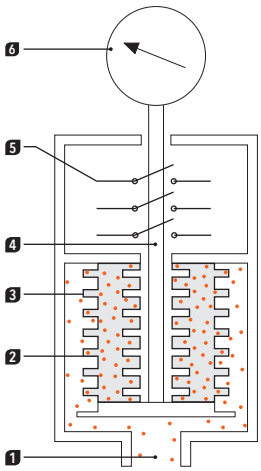

The density monitors are filled at works to the customer's gas density specification (variant with three micro switches is shown).

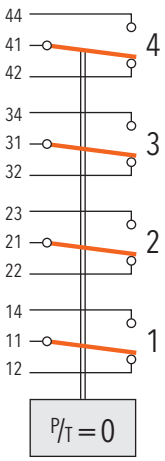

Up to four galvanically isolated micro switches actuate different alarm signals.

Technical data Gas Density Monitor 87X6	
Principle	Reference gas measurement
Material measurement system	Sensor: 1.4435, 1.4404, 1.4571, (AISI316L, AISI316)
Material pressure connection	1.4435, 1.4404, 1.4571 (AISI316L, AISI316)
Material housing	AlSi10Mg
Ambient temperature	–40 ... +80 °C (optional: –60 ... +80 °C)
Measuring range	0 ...1.1 MPa
Display	SF_6 indicator dial (optional)
Hysteresis	< 15 kPa
Accuracy micro switch	±10 kPa at –30...+50 °C (for first switchpoint pressure: <650 kPa @ 20 °C)
Accuracy of indicator	Within numeralised range ±10 kPa @ 20 °C
Electrical connection	Plugable terminal screw connector 0.2...2.5 mm^2
Ratings of micro switches	AC 250V 10 (1.5) A DC 250V 0.1 (0.05) A DC 220V 0.25 (0.2) A DC 110V 0.5 (0.3) A DC 24V 2 (1) A
Degree of protection	IP65
Service	Check micro switch setpoint after 5 years
Weight	~800 g

For other available pressure connections: See data sheet www.trafag.com/H72502

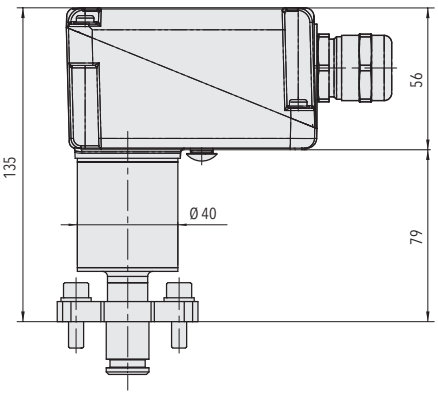

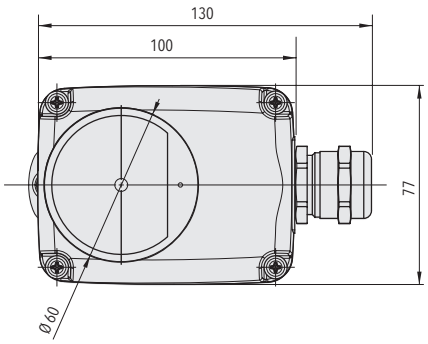

trafag sensors controls

Trafag Gas Density Sensor 8774

Unique electronic SF_6 gas density monitoring with quarz tuning fork

The Trafag gas density sensor type 8774 was specifically designed for monitoring insulation gases. This unique patented sensor technology opens new paths for the energy distributing industry to realize comprehensive trend analysis and monitoring. It measures directly and continuously the gas density providing an analogue or digital output signal. The version with digital output signal also provides the signal of the gas temperature.

Advantages

- Continuous digital or analogue output signal usable for SF_6 trend analysis
- Wide density range
- Additional output of sensor temperature (digital version only)
- Extremely drift-free signal
- Outdoor application without additional protection
- Electromagnetic compatibility (EMC) according to EN/IEC 61000-4
- Density measurement of all gases possible
- Facilitates compliance with greenhouse gas regulations

Operating principle of the electronic gas density sensor

The constant resonant frequency of a quartz oscillator under vacuum is compared with the resonant frequency of an identical quartz situated in the sample gas. The difference in the resonant frequency is proportional to the density of the sample gas. This difference is processed into an analogue or digital output signal. With the digital variant the temperature can be measured using the pulse width of the frequency signal.

SF_6 gas density: analogue output signal

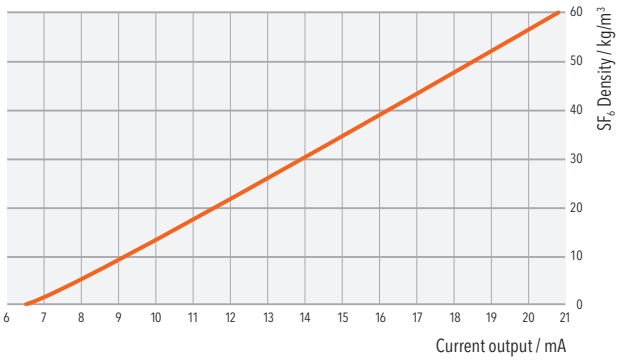

SF_6 gas density: digital output signal

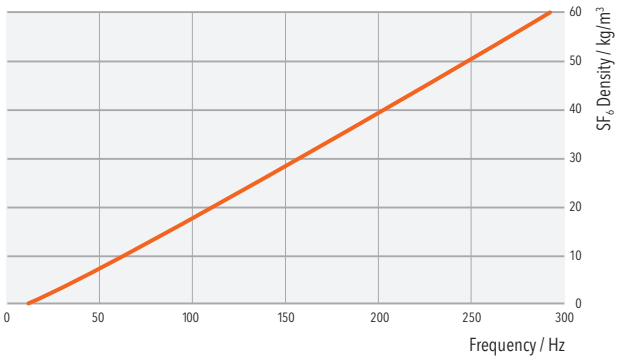

Functional diagram

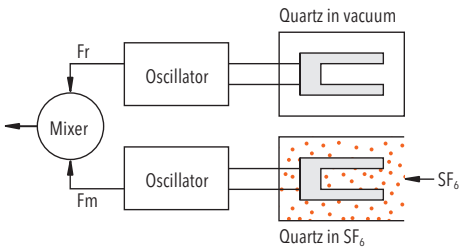

Current pulses (typical height 12–14 mA)

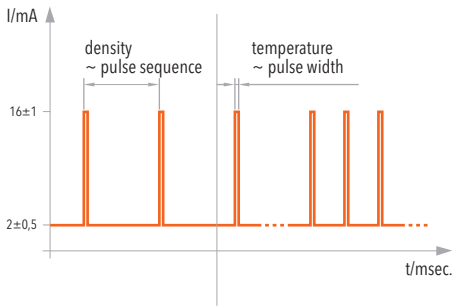

Finit element stress analysis of an oscillating tuning fork

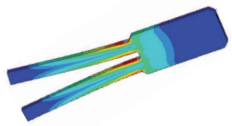

Technical data Gas Density Sensor 8774			
Principle	Oscillating quartz measurement	Digital output signal	Current pulses
Material pressure connection	1.4435 (AISI316L)	Digital density signal	Pulse frequency
Material tube	1.4301	Digital temperature signal	Pulse width
Operating & Media temperature	–40 ... +70 °C	Analogue output signal	6.5 ... 20 mA
Measuring range	0 ... 0.85 MPa / 0...60 kg SF_6/m^3	Analogue density signal	Current loop
Accuracy of sensor	±1.0% FS typ., ±1.8% FS max.	Degree of protection	IP65
Sensor supply analogue ouput	2-wire, 10 ... 32 VDC	Vibration	15 g (max. 6 mm), 5 ... 2000 Hz
Sensor supply digital output	2-wire, 10 ... 20 VDC	Shock	100 g / 6 ms
Sensor supply digital output	3-wire, 14 ... 28 VDC	Weight	~200–400 g

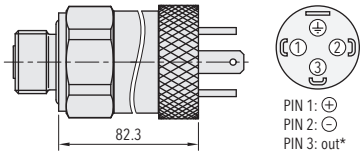

* for digital 3-wire version 8774.XX.XXX3...

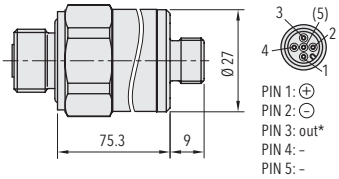

* for digital 3-wire version 8774.XX.XXX3...

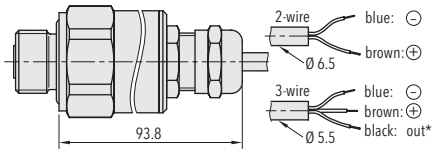

* for digital 3-wire version 8774.XX.XXX3...

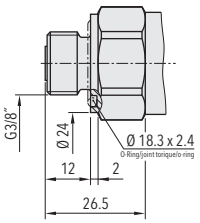

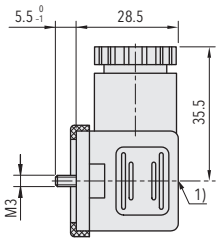

1) Torque moment 50...60 Ncm

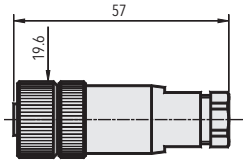

Various pressure connections available

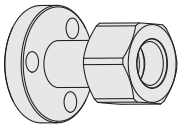

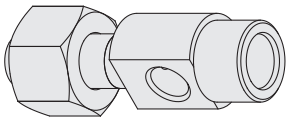

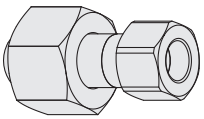

Data sheet
www.trafag.com/H72507

trafag sensors controls

Trafag Hybrid Gas Density Monitor 878X

Unique SF_6 monitoring: Combined mechanical AND electronic monitoring

The Hybrid Gas Density Monitor combines the advantages of the proven mechanical monitor based on the superior reference chamber with the unique electronic gas density sensor. The combined technology has local switches / read-out and allows remote surveillance and trend analysis. The compact all-in-one-device with a single pressure port operates reliably and maintenance-free under harsh conditions indoors and outdoors. It is accurate over a wide range of temperatures and altitudes.

Advantages

- Mechanical switches AND continuous output signal usable for trend analysis (analogue output signal)
- High resistance against vibration and shock
- No bouncing of electrical contacts
- Very high electromagnetic compatibility (EMC) compatible with EN/IEC 61850
- No false alarms at low temperatures
- Maintenance-free, no recalibration of switchpoints
- Facilitates compliance with greenhouse gas regulations mandated by EPA (USA), SGCC (China) or F-Gas Regulation (Europe)

Operating principle of the reference chamber ...

The gas density of SF_6 compartments is compared via a bellows system with the gas density in a reference gas chamber in the monitor. If the density of the gas alters, the bellows system actuates one or more micro switches. If the gas temperature and therefore its pressure changes, the same pressure difference occurs also in the reference chamber. No false alarm is triggered due to temperature-induced pressure changes. Up to three galvanically isolated micro switches actuate different alarm signals. An optional SF_6 indicator provides visual inspection of the SF_6 gas density as gas pressure at 20°C.

1. SF_6 tank side
2. metal bellow
3. reference gas
4. switching rod
5. micro switch
6. display

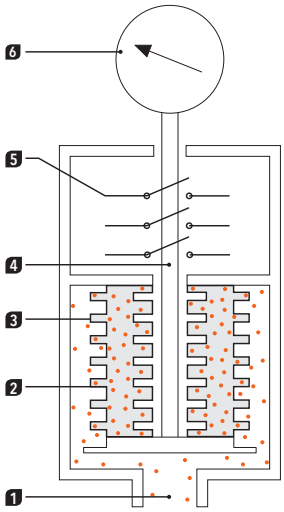

The density monitors are filled at works to the customer's gas density specification (variant with three micro switches is shown).

... and the electronic gas density sensor

The constant resonant frequency of a quartz oscillator under vacuum is compared with the resonant frequency of an identical quartz situated in the sample gas. The difference in the resonant frequency is proportional to the density of the sample gas. This difference is processed into an analogue output signal.

SF_6 gas density

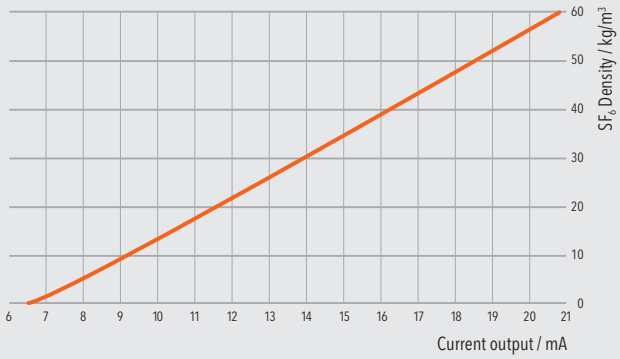

SF_6 gas pressure at 20 °C

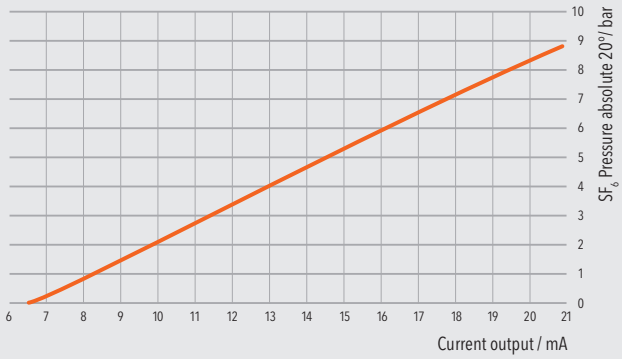

Functional diagram: Analogue signal output

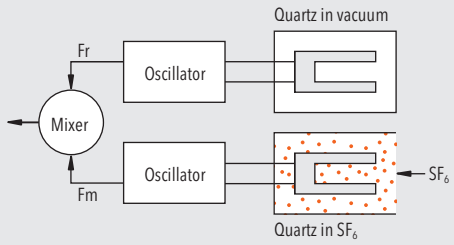

Finit element stress analysis of an oscillation tuning fork

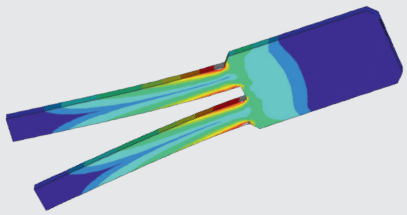

Electrical connections and wiring diagram

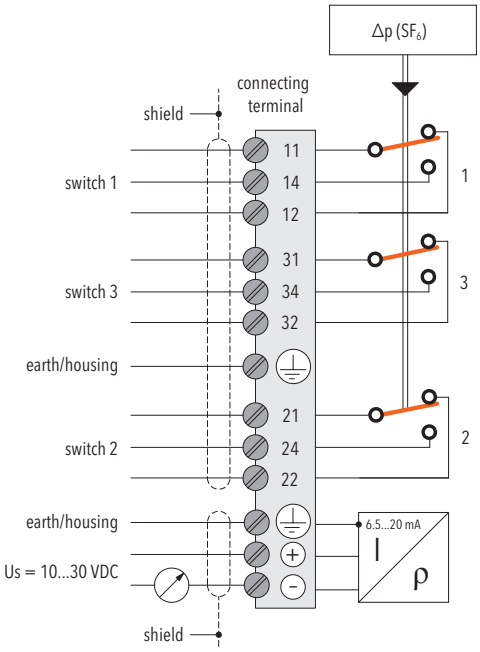

Up to three galvanically isolated micro switches actuate different alarm signals.

trafag sensors controls

Trafag Hybrid Gas Density Monitor 878X

Technical data Gas Density Monitor 878X	
Principle	Reference gas measurement and oscillating quartz measurement
Material measurement system	Sensor: 1.4435, 1.4404, 1.4471, (AISI316L, AISI316) Sensor housing: 1.4435, 1.4404
Material pressure	1.4435, 1.4404, 1.4471 (AISI316L, AISI316)
Housing	AlSi10Mg
Ambient temperature	–40 ... +80 °C
Measuring range	0 ... 1.1 MPa (mechanical monitoring); 0 ... 0.85 MPa (electronic monitoring)
Display	SF_6 indicator dial (optional)
Hysteresis	< 15 kPa
Accuracy micro switch	±10 kPa (filling pressure: < 650 kPa) / ±12 kPa (filling pressure: > 1 MPa) at –30 ... +50 °C
Accuracy of indicator	Within numeralised range ±10 kPa @ 20 °C
Accuracy of sensor	±1.0 % FS typ., ±1.8 % FS max
Electrical connection	Plugable terminal screw connector 0.2 ... 2.5 mm^2
Ratings of micro switches	AC 250V 10 (1.5) A DC 250V 0.1 (0.05) A DC 220V 0.25 (0.2) A DC 110V 0.5 (0.3) A DC 24V 2 (1) A
Sensor supply	10 ... 32 VDC
Degree of protection	IP65
Service	Check micro switch setpoint after 5 years
Weight	~1.05 kg

For other available pressure connections: See data sheet www.trafag.com/H72502

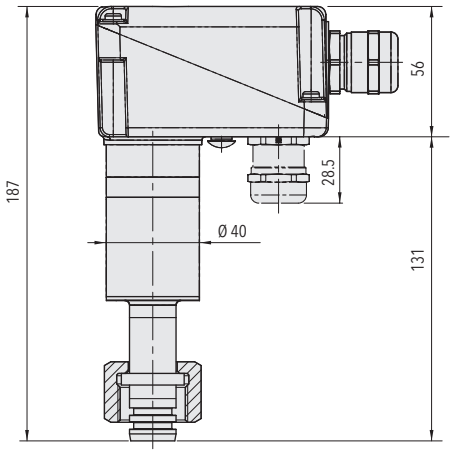

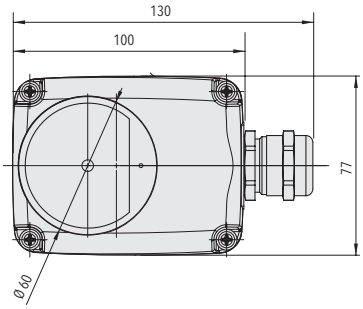

Options and Accessories

Rain cover with separate thermal insulation

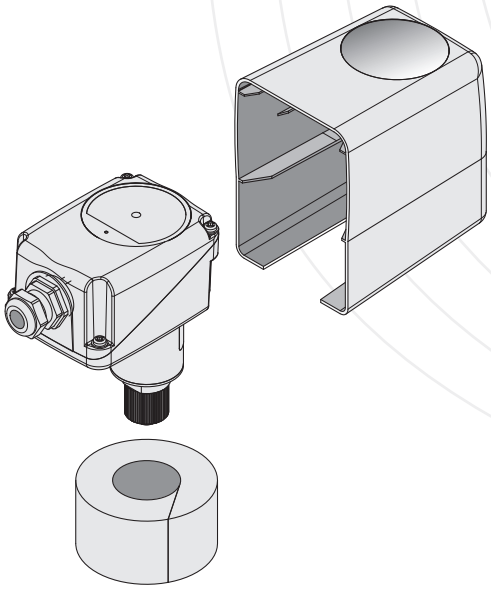

Foam cover with window

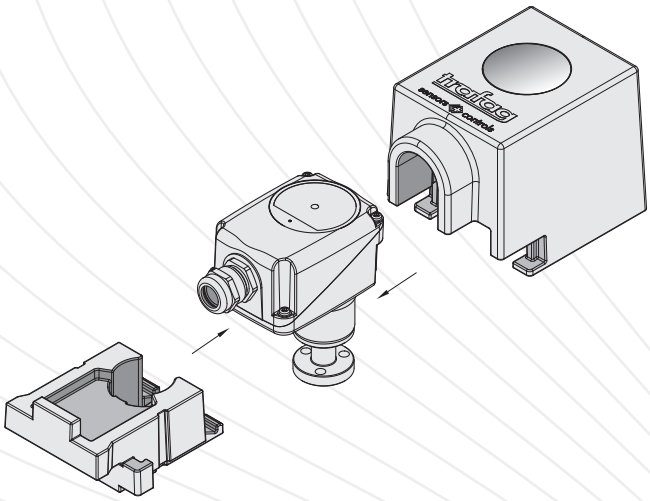

Low pressure indicator

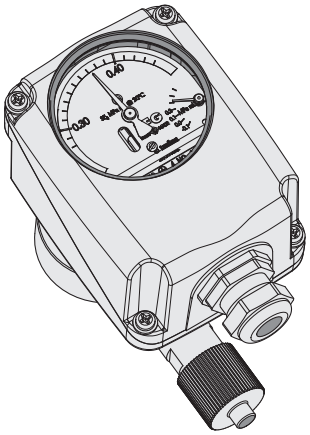

Intank pressure connection

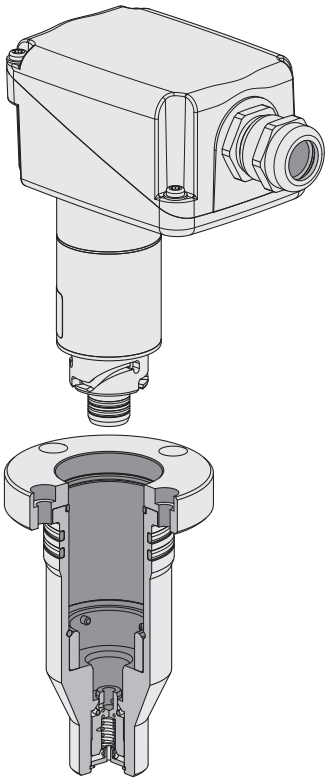

Radial pressure connection

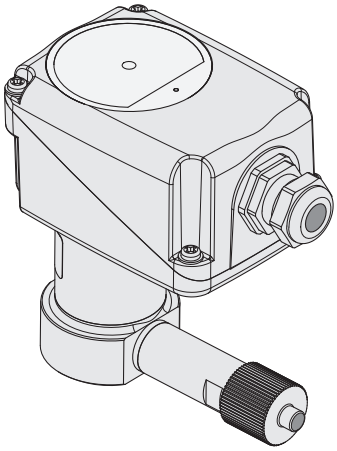

trafag
sensors controls

Leading companies trust in Trafag's superior know-how

Certified Management System
SQS
Reg. Nr. 1149501
ISO 9001

ABB

ALSTOM

HYOSUNG

HYUNDAI
ENGINEERING CO., LTD.

MITSUBISHI ELECTRIC

NHVS
新东北电气集团高压开关有限公司

SIEMENS

SIEYUAN

TOSHIBA

... and many more

Subject to change H70643b Trafag AG 10/2011

Trafag AG
Sensors & Controls

Industriestrasse 11
CH-8608 Bubikon

Tel. +41 44 922 32 32
Fax +41 44 922 32 33

www.trafag.com
trafag@trafag.com

trafag
sensors controls